Fire Test Report

ANSI/API Standard 607, 5th Edition

Performed for

ValvTechnologies, Inc.

www.valv.com

8 inch Class 300 Ball Valve

Product Code: H5C2-RF-FP-B080-004AA-P02
Project Number: 213204

Test Date: April 24, 2014

Performed by

YARMOUTH RESEARCH AND TECHNOLOGY, LLC

434 Walnut Hill Road
North Yarmouth, ME 04097 USA
(207) 829-5359
info@yarmouthresearch.com
www.yarmouthresearch.com

Yarmouth Research and Technology, LLC

Customer:	ValvTechnologies, Inc.	**Date:**	4/24/2014
Specification:	ANSI/API Standard 607, Fifth Edition		

Product Description:	8 inch Class 300 Ball Valve
Valve Code:	H5C2-RF-FP-B080-004AA-P02
Project Number:	PN213204

Yarmouth Engineer:	Matthew J. Wasielewski, P.E.
Equipment Confirmed to be in Calibration to NIST Standards:	Yes

Burn and Cool Down Test

Burn Start Time:	11:05:00	
Average Pressure During Burn:	544	psig
Seat Leak Rate During Burn:	0.0	ml/min
Allowable Seat Leak Rate:	3200	ml/min
External Leak Rate During Burn/Cool Down:	0	ml/min
Allowable External Leak Rate:	800	ml/min

Amount of Time of Avg. Cal. Blocks > 650 deg. C:	17.0	minutes
Were Test Conditions Within Compliance?	Yes	

Were the Valve Leakages Below the Allowables?	Yes

Post-Burn Seat Test

Average Pressure During Test:	31	psig
Seat Leak Rate:	0.0	ml/min
Allowable Seat Leak Rate:	320	ml/min

Was the Leakage Below the Allowable?	Yes

Operational Test

Average Pressure During Test:	548	psig
External Leak Rate After Operating:	0.0	ml/min
Allowable External Leak Rate:	200	ml/min

Was the Leakage Below the Allowable?	Yes

Does Valve Pass or Fail the Test Standard?	**PASS**

Certified by

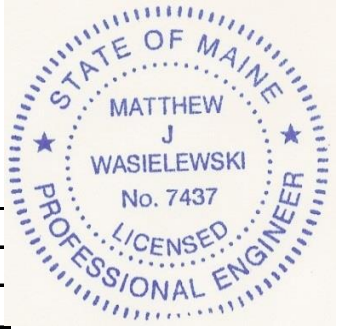

Matthew J. Wasielewski, PE
President and Manager
Yarmouth Research & Technology, LLC

Fire Test Information Sheet

Valve Manufacturer's Name:	ValvTechnologies, Inc.
Valve Manufacturer's Address:	5904 Bingle Road Houston,Tx 77092
Did valve meet all required hydrostatic, leakage and other production pressure tests?	Yes
Valve Product Code:	H5C2-RF-FP-B080-004AA-P02
Valve Description Size: Pressure Rating: Pressure Rating at 100F: Type: Weight: Reduced or Full Bore: Body/Bonnet Material: Trim Material: Seat Material: Stem / Body Seal Material: Body Bolting / Body Nut Material: Is valve considered "Soft-Seated"?	8" 300# 300# H-Series Metal Seated BV 2164 lbs. Full port A105 SA-29 Gr. 4130 SA-29 Gr. 4130 SA-29 Gr. 4130 / O-rings (EDR) + Graphite A193 Gr. B7 / A194 Gr. 2H No
Valve Markings Nameplate Information: Casting Markings:	NA
Assembly Drawing Number / Revision / Date of Issue:	130729-001 06/12/2013
Assembly Drawing sent to Yarmouth:	Yes
If valve is fitted with gearbox, state gearbox manufacturer, model number and mechanical advantage:	Rotork IW6R – Rotork Gearbox w/ 20" H.W
If valve is non-symmetric, state direction of flow for test:	NA
For double-seated valves, state maximum allowable cavity pressure:	NA
Manufacturer's Contact Name /Date:	

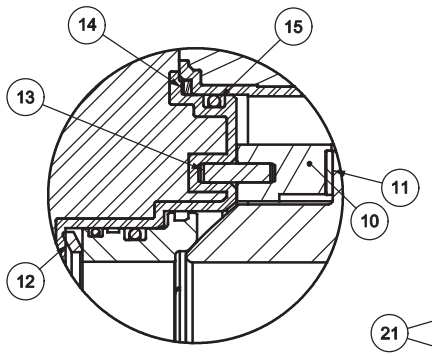

DETAIL B

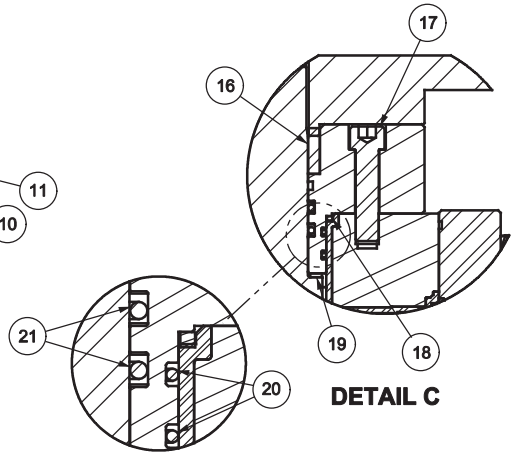

DETAIL C

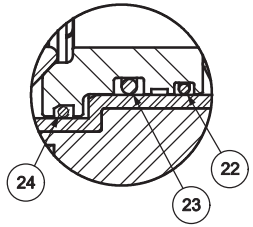

DETAIL D

BILL OF MATERIALS			
ITEM	DESCRIPTION	MATERIALS	QTY.
1	END CAP		2
2	BODY		1
3	BALL		1
4	THRUST WASHER		1
5	SEAT		2
6	BONNET		1
7	CROWN PLATE		1
8	STEM		1
9	KEY		2
10	STANDARD TRUNNION BEARING		2
11	STANDARD SLEEVE BEARING		2
12	BELLEVILLE SPRING		2
13	DOWEL PIN		4
14	BODY GASKET		2
15	O-RING (END CAP)		2
16	STEM PACKING		1
17	BONNET CAP SCREW		4
18	BONNET GASKET		1
19	STEM BEARING		1
20	O-RING (BONNET O.D.)		2
21	O-RING (BONNET I.D.)		2
22	O-RING (SEAT, SMALLER)		2
23	O-RING (SEAT, LARGER)		2
24	FLEX ROPE		2
25	DOUBLE BALL CHECK INJECTION FITTING		4
26	BODY STUD		24
27	BODY NUT		24
28	DRAIN VALVE		2
29	CROWN PLATE CAP SCREW		4
30	INJECTION FITTING W/ CHECK VALVE		1
31	ACTUATOR		1

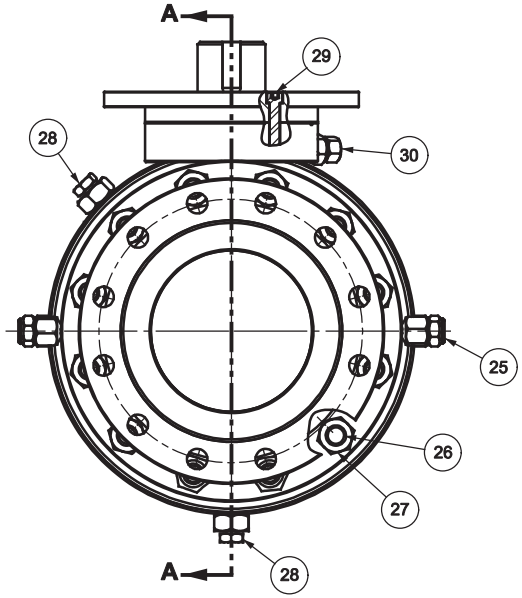

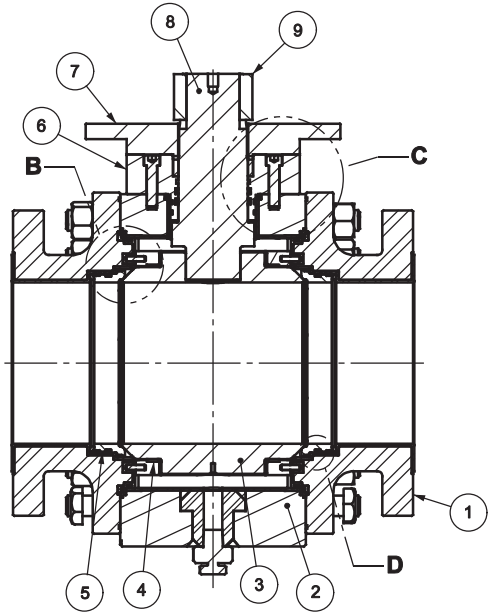

SECTION A-A

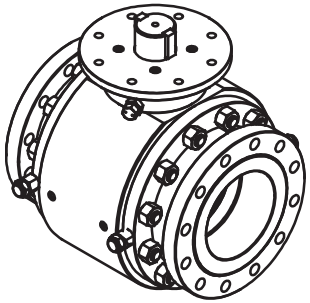

REV.	DATE	DESCRIPTION	ECN	BY	APR
0	6/27/13	RELEASED	-	MS	PH

THIRD ANGLE PROJECTION

THIS DRAWING AND THE INFORMATION CONTAINED WITHIN IS CONSIDERED TO BE CONFIDENTIAL AND THE SOLE PROPERTY OF VALVTECHNOLOGIES. THE CONTENTS OF THIS DRAWING MAY NOT BE REPRODUCED OR DISCLOSED VERBALLY OR OTHERWISE OUTSIDE THE HOLDERS OFFICE WITHOUT THE WRITTEN APPROVAL OF VALVTECHNOLOGIES.

DIMENSIONS ARE IN: INCHES

OVERALL DIMENSIONS: (L) x (W) x (H)

GENERAL ASSEMBLY

ACTUATOR ORIENTATION IS FOR ILLUSTRATION PURPOSES ONLY. ACCESSORIES MAY NOT BE INCLUDED IN DRAWING.

MODEL FILE: 130729-001

SCALE	WEIGHT	SHEET	SIZE
1:6	2164 LBS	1 OF 2	B

DRAWN BY	DATE
MS	6/12/13
ENGINEER	DATE
PH	6/12/13

VALVTECHNOLOGIES

5904 BINGLE ROAD, HOUSTON TEXAS 77092
WWW.VALV.COM

TITLE: 8" 300#, RF FLANGE, ZLT
7.913" BORE
3-PIECE TRUNNION

130729-001

REV. 0

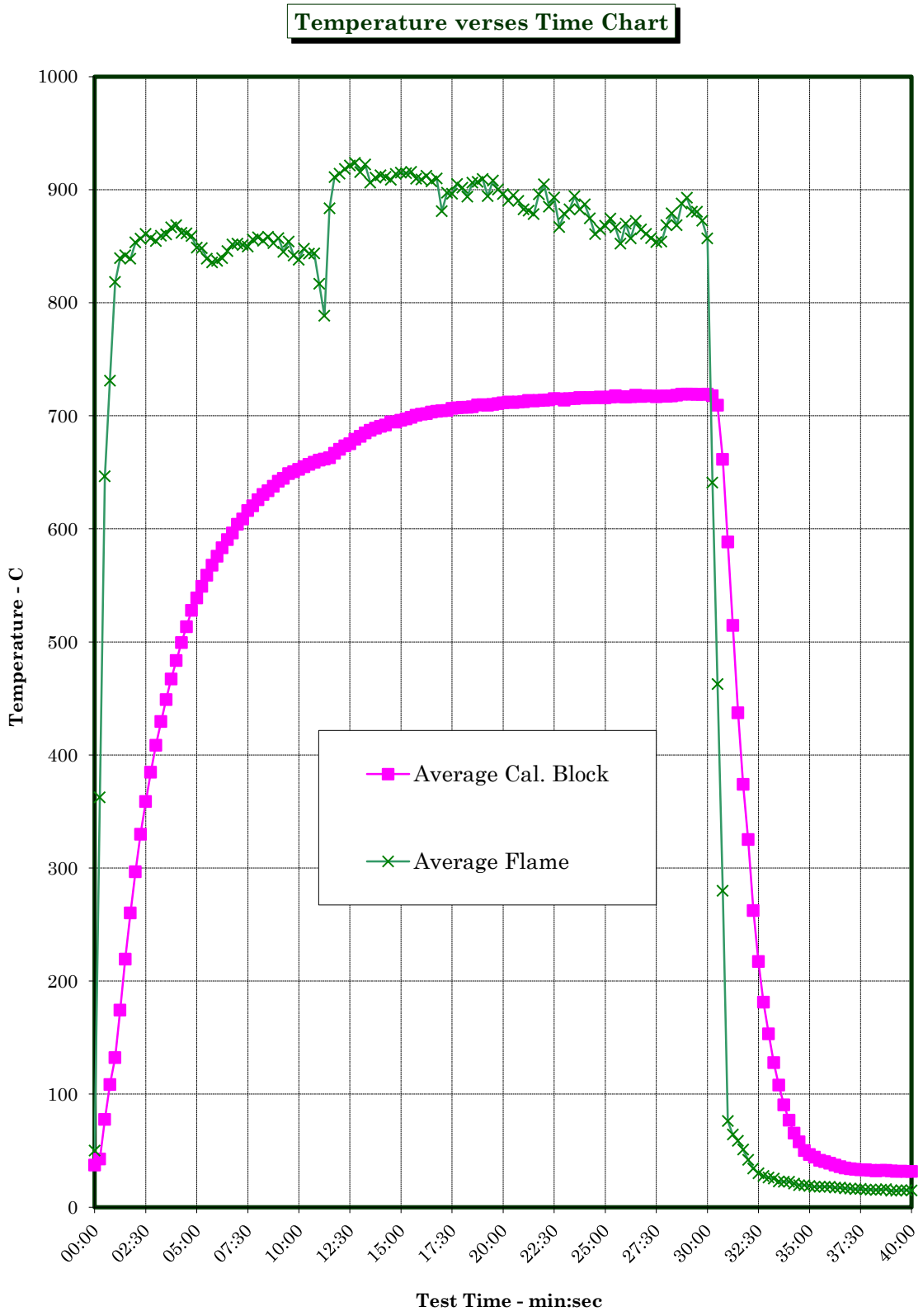
Temperature verses Time Chart
1000
900
800
700
600
500
400
300
200
100
0
Temperature - C
00:00
02:30
05:00
07:30
10:00
12:30
15:00
17:30
20:00
22:30
25:00
27:30
30:00
32:30
35:00
37:30
40:00
Test Time - min:sec
Average Cal. Block
Average Flame

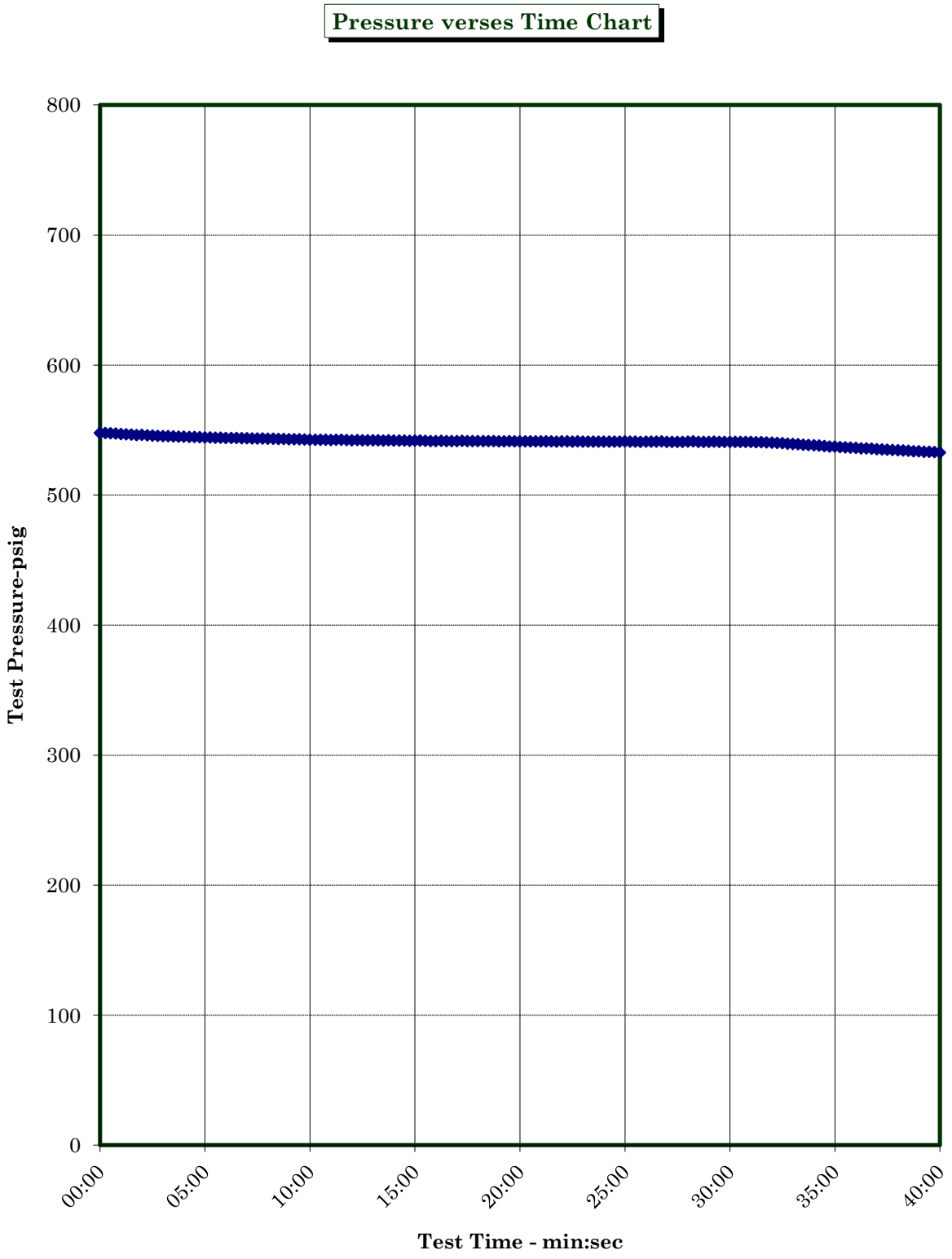
Pressure verses Time Chart
800
700
600
500
400
300
200
100
0
Test Pressure-psig
00:00
05:00
10:00
15:00
20:00
25:00
30:00
35:00
40:00
Test Time - min:sec

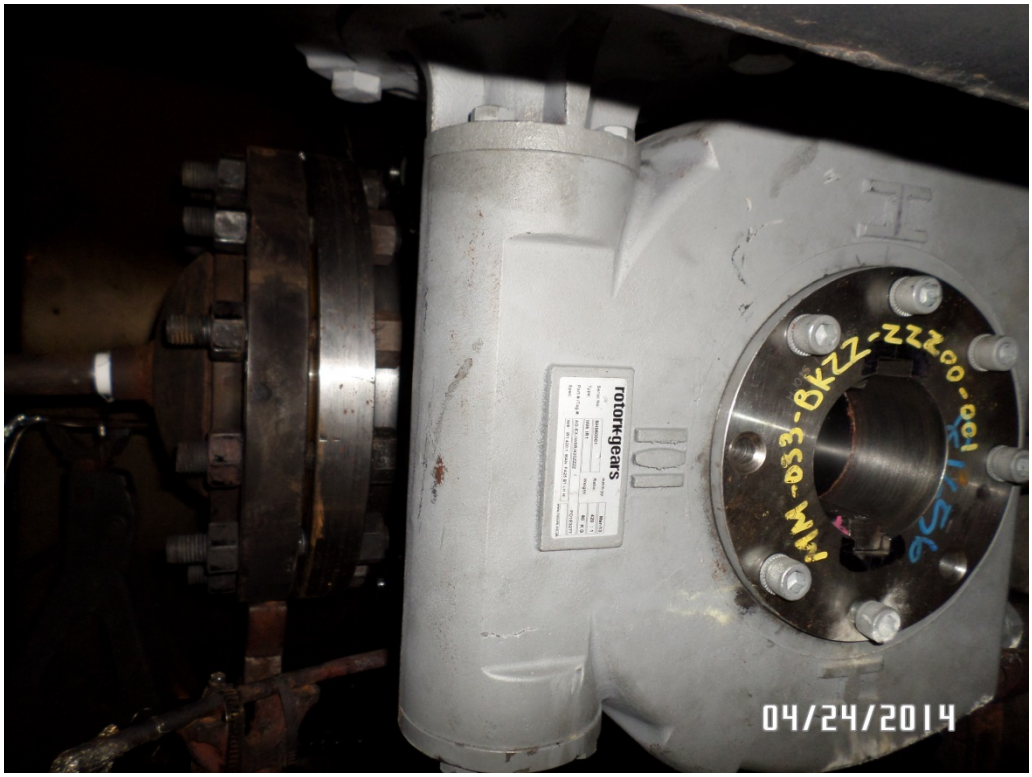

Test Setup Prior to Burn

Test Valve During Burn

Test Valve During Burn

Yarmouth Research and Technology, LLC

Fire Test Information

Customer: ValvTechnologies, Inc. **Date:** 4/24/2014

Product Code: 8 inch Class 300 Ball Valve

Project Number: PN213204

Fire Test Raw Data

Time	Pressure (psig)	Water Volume (mls)	Cal. Block 1 Temp-C	Cal. Block 2 Temp-C	Cal. Block 3 Temp-C	Avg. Cal Block Temp-C	Bonnet Flame Temp-C	Body Flame Temp-C	Average Flame Temp-C
11:05:00	548	41625	41	43	27	37	47	53	50
11:05:15	548	41641	44	48	35	43	313	412	363
11:05:30	548	41680	67	86	80	78	608	684	646
11:05:45	547	41633	99	121	106	108	719	743	731
11:06:00	547	41660	128	133	136	132	763	874	818
11:06:15	547	41683	165	176	182	174	779	899	839
11:06:30	547	41685	204	223	231	219	781	903	842
11:06:45	546	41687	241	270	270	260	768	910	839
11:07:00	546	41663	272	314	303	297	779	927	853
11:07:15	546	41655	302	353	335	330	785	928	857
11:07:30	546	41697	329	386	362	359	791	931	861
11:07:45	546	41629	354	414	386	385	789	925	857
11:08:00	545	41685	376	441	409	408	788	921	854
11:08:15	545	41645	396	464	428	429	793	925	859
11:08:30	545	41682	414	487	445	449	796	924	860
11:08:45	545	41670	431	507	463	467	802	932	867
11:09:00	545	41672	447	526	478	484	808	929	869
11:09:15	545	41662	462	543	492	499	793	930	862
11:09:30	545	41654	476	559	505	513	796	927	861
11:09:45	545	41674	489	573	521	528	789	928	859
11:10:00	544	41678	500	586	530	539	771	927	849
11:10:15	544	41665	509	598	540	549	774	922	848
11:10:30	544	41678	518	608	550	559	761	917	839
11:10:45	544	41675	524	618	561	568	753	918	836
11:11:00	544	41679	530	627	570	576	756	918	837
11:11:15	544	41651	536	635	578	583	757	922	839
11:11:30	544	41575	542	642	587	590	776	915	846
11:11:45	544	41822	549	649	591	596	790	913	851
11:12:00	544	41720	557	655	600	604	787	918	852
11:12:15	544	41677	562	661	603	609	785	917	851
11:12:30	543	41773	568	666	614	616	787	913	850
11:12:45	543	41781	573	671	616	620	794	918	856
11:13:00	543	41641	579	676	623	626	800	916	858

Fire Test Data - continued

11:13:15	543	41654	583	680	628	630	792	918	855
11:13:30	543	41746	588	683	630	634	801	916	858
11:13:45	543	41744	592	687	634	638	789	917	853
11:14:00	543	41713	595	691	641	642	796	919	857
11:14:15	543	41757	599	693	641	644	777	913	845
11:14:30	543	41750	602	697	648	649	791	918	854
11:14:45	543	41746	604	699	648	651	770	913	842
11:15:00	542	41744	606	702	650	652	763	913	838
11:15:15	543	41748	608	704	653	655	781	915	848
11:15:30	543	41749	610	706	655	657	778	909	843
11:15:45	542	41741	612	708	656	659	781	907	844
11:16:00	542	41739	613	710	659	661	723	910	817
11:16:15	542	41752	612	712	661	662	663	914	788
11:16:30	542	41749	612	714	662	663	838	929	884
11:16:45	542	41761	618	716	667	667	891	932	911
11:17:00	542	41767	624	718	669	670	890	938	914
11:17:15	542	41779	631	720	669	673	898	938	918
11:17:30	542	41816	636	721	668	675	901	942	921
11:17:45	542	41725	642	723	672	679	904	943	924
11:18:00	542	41791	647	724	674	682	893	938	916
11:18:15	542	41830	652	726	677	685	904	940	922
11:18:30	542	41736	656	727	678	687	876	936	906
11:18:45	542	41755	660	728	678	689	880	941	911
11:19:00	542	41840	663	729	679	690	883	942	913
11:19:15	542	41852	666	730	680	692	882	941	911
11:19:30	542	41784	668	731	684	695	878	939	909
11:19:45	542	41822	671	732	680	694	886	942	914
11:20:00	542	41811	673	733	682	696	888	942	915
11:20:15	542	41839	676	734	682	697	887	942	914
11:20:30	542	41842	678	734	683	699	889	942	916
11:20:45	542	41827	681	735	685	700	880	939	910
11:21:00	542	41833	683	736	686	701	875	943	909
11:21:15	542	41839	684	736	686	702	881	943	912
11:21:30	542	41856	686	737	687	703	878	937	907
11:21:45	541	41834	688	738	686	704	878	942	910
11:22:00	542	41833	689	738	686	704	863	898	881
11:22:15	542	41837	690	739	685	705	874	920	897
11:22:30	541	41887	691	739	689	706	874	918	896
11:22:45	541	41845	692	740	689	707	888	922	905
11:23:00	542	41890	693	740	689	707	878	925	902
11:23:15	542	41902	694	740	688	707	867	921	894
11:23:30	541	41875	694	741	689	708	888	924	906
11:23:45	541	41885	696	741	692	709	891	923	907

Fire Test Data - continued

11:24:00	541	41892	697	741	692	710	894	925	909
11:24:15	541	41897	698	741	690	709	872	916	894
11:24:30	541	41899	698	741	691	710	893	923	908
11:24:45	541	41909	700	741	691	711	882	918	900
11:25:00	541	41922	701	741	692	711	871	922	896
11:25:15	541	41938	701	741	694	712	871	909	890
11:25:30	541	41928	702	742	691	712	876	914	895
11:25:45	541	41928	702	742	692	712	871	909	890
11:26:00	541	41925	702	742	693	712	864	901	883
11:26:15	541	41949	702	743	696	714	859	904	881
11:26:30	541	41957	702	743	694	713	856	901	878
11:26:45	541	41956	702	744	694	713	876	916	896
11:27:00	541	41968	703	744	694	714	888	921	905
11:27:15	541	41958	705	744	693	714	873	897	885
11:27:30	541	41969	706	744	696	715	873	913	893
11:27:45	541	41977	706	744	695	715	837	897	867
11:28:00	541	41972	704	744	692	714	850	907	879
11:28:15	541	41983	704	745	696	715	857	908	883
11:28:30	541	41998	705	746	695	715	873	916	894
11:28:45	541	42001	706	746	697	716	853	912	883
11:29:00	541	42011	705	746	696	716	865	909	887
11:29:15	541	42018	705	746	697	716	844	905	875
11:29:30	541	42018	705	746	696	716	832	889	861
11:29:45	541	42001	704	747	699	717	831	898	865
11:30:00	541	42020	703	747	697	716	833	903	868
11:30:15	541	42034	704	748	698	717	854	895	874
11:30:30	541	42044	704	748	700	718	840	893	867
11:30:45	541	42039	704	749	698	717	821	883	852
11:31:00	541	42040	704	749	696	717	844	896	870
11:31:15	541	42049	704	750	696	717	832	882	857
11:31:30	541	42058	704	751	700	718	842	903	872
11:31:45	541	42060	704	751	697	717	829	900	865
11:32:00	541	42058	703	751	699	718	825	897	861
11:32:15	541	42067	702	752	698	717	822	893	857
11:32:30	541	42088	701	752	697	717	817	891	854
11:32:45	541	42091	701	752	700	718	817	892	854
11:33:00	541	42084	700	753	699	717	831	906	869
11:33:15	541	42075	701	753	699	718	847	911	879
11:33:30	541	42099	702	754	698	718	827	911	869
11:33:45	541	42117	703	754	699	719	856	919	888
11:34:00	541	42104	704	754	698	719	862	923	893
11:34:15	541	42112	704	754	699	719	847	914	881
11:34:30	541	42139	704	754	698	719	838	923	881

Fire Test Data - continued

11:34:45	541	42125	703	754	699	719	832	913	873
11:35:00	541	42135	702	755	700	719	826	888	857
11:35:15	541	42128	700	755	698	718	626	656	641
11:35:30	541	42159	686	753	689	709	455	471	463
11:35:45	541	42161	573	740	672	662	214	346	280
11:36:00	541	42155	424	696	645	588	77	76	76
11:36:15	541	42160	311	619	614	515	59	69	64
11:36:30	541	42160	199	534	578	437	53	64	59
11:36:45	540	42159	123	454	545	374	44	57	51
11:37:00	540	42146	94	377	504	325	35	49	42
11:37:15	540	42142	71	301	415	262	28	41	34
11:37:30	540	42137	59	229	363	217	23	37	30
11:37:45	540	42122	51	175	318	181	21	34	28
11:38:00	539	42087	47	137	277	153	19	33	26
11:38:15	539	42090	43	110	230	128	18	33	25
11:38:30	539	42073	42	92	190	108	17	28	23
11:38:45	538	42055	39	79	152	90	17	28	23
11:39:00	538	42010	38	71	121	77	16	29	23
11:39:15	538	42015	37	64	94	65	16	26	21
11:39:30	538	41990	37	60	77	58	14	24	19
11:39:45	537	41973	36	56	58	50	14	24	19
11:40:00	537	41958	36	53	51	46	14	23	19
11:40:15	537	41917	36	51	46	44	14	22	18
11:40:30	537	41918	35	49	39	41	14	22	18
11:40:45	536	41900	35	48	38	40	14	22	18
11:41:00	536	41888	35	47	34	39	14	22	18
11:41:15	536	41853	34	46	32	37	13	21	17
11:41:30	536	41848	34	44	29	36	13	21	17
11:41:45	536	41851	33	43	27	35	13	21	17
11:42:00	535	41817	33	43	26	34	13	20	16
11:42:15	535	41782	33	42	25	34	13	19	16
11:42:30	535	41777	33	42	24	33	13	19	16
11:42:45	535	41775	32	41	26	33	12	19	16
11:43:00	534	41746	32	41	25	33	12	19	16
11:43:15	534	41748	32	40	24	32	12	18	15
11:43:30	534	41709	32	40	26	32	12	19	16
11:43:45	534	41694	32	39	26	32	12	20	16
11:44:00	534	41700	31	39	26	32	12	17	14
11:44:15	533	41675	31	38	25	31	12	17	14
11:44:30	533	41650	31	38	26	32	12	18	15
11:44:45	533	41649	31	38	26	32	12	18	15
11:45:00	533	41650	31	38	26	31	12	18	15

Leakage Summary for Burn and Cool Down Periods

All pressure transducers and thermocouples are in calibration per YRT's QA program.

Seat leakages were collected manually. External leakage was collected electronically.

Total Through Seat Leakage Collected Over 30 Minute Duration:	0.0	mls
Average Leak Rate Over 30 Minute Duration:	0.0	ml/min
Allowable Leak Rate:	3200	ml/min

Total Through Seat Leakage Collected Over 10 Minute Cool Down:	0.0	mls

Total Water Volume Lost Over 40 Minute Burn and Cool Down:	-25	mls
Water Collected in System Relief Valve:	0.0	mls
Calculated External Leakage During 40 Minute Duration:	-25	mls
Average Leak Rate Over 40 Minute Duration:	0	ml/min
Allowable Leak Rate:	800	ml/min

Were the Valve Leakages Below the Allowables?	**Yes**

Yarmouth Research and Technology, LLC

Summary of Test Parameters During Burn and Cool Down Periods

Amount of Time Pressure Dropped Below 50%:	0.0	minutes
Maximum Allowable Low Pressure Time:	2.0	minutes
Maximum Pressure During Burn/Cool Down:	548	psig
Average Pressure During Burn/Cool Down:	541	psig
Minimum Pressure During Burn/Cool Down:	533	psig
Amount of Time of Avg. Cal Block > 650 deg.C:	17.0	minutes
Minimum Allowable Time at Temperature:	15.0	minutes
Maximum Avg Cal Block Temperature:	719	deg. C
Average Cal Block Temperature:	508	deg. C
Lowest Avg Cal. Block Temperature:	31.5	deg. C
Maximum Body Flame Temperature During Burn:	943	deg. C
Average Body Flame Temperature During Burn:	904	deg. C
Maximum Bonnet Flame Temperature During Burn:	904	deg. C
Average Bonnet Flame Temperature During Burn:	821	deg. C
Average of Both Flame Temperatures During Burn:	863	deg. C

Notes

Were Test Conditions Within Compliance?	**Yes**

Yarmouth Research and Technology, LLC

Post-Burn Seat Test Information

Customer: ValvTechnologies, Inc. **Date:** 4/24/2014

Product Code: 8 inch Class 300 Ball Valve

Project Number: PN213204

Test Data

Time	Pressure (psig)	Cal Block Temp - C
11:53:26	31	34
11:53:41	31	34
11:53:56	31	34
11:54:11	31	34
11:54:26	31	34
11:54:41	31	34
11:54:56	31	34
11:55:11	31	34
11:55:26	31	34
11:55:41	31	34
11:55:56	31	34
11:56:11	31	34
11:56:26	31	34
11:56:41	31	34
11:56:56	31	34
11:57:11	31	34
11:57:26	31	34
11:57:41	31	34
11:57:56	31	34
11:58:11	31	34
11:58:26	31	34

Leakages were collected manually.

Total Seat Leakage Collected Over 5 Minute Duration:	0.0	mls
Average Leak Rate Over 5 Minute Duration:	0.0	ml/min
Allowable Leak Rate:	320	ml/min

Was the Valve Leakage Below the Allowable?	**Yes**

Yarmouth Research and Technology, LLC

Operational Test Information

Customer: ValvTechnologies, Inc. **Date:** 4/24/2014

Product Code: 8 inch Class 300 Ball Valve

Project Number: PN213204

Time	Pressure (psig)	Cal Block Temp - C
12:04:18	552	36
12:04:33	551	36
12:04:48	549	36
12:05:03	548	36
12:05:18	550	36
12:05:33	549	36
12:05:48	548	36
12:06:03	548	36
12:06:18	547	36
12:06:33	547	36
12:06:48	547	36
12:07:03	546	36
12:07:18	546	36
12:07:33	546	36
12:07:48	545	36
12:08:03	548	36
12:08:18	547	36
12:08:33	547	36
12:08:48	547	36
12:09:03	546	36
12:09:18	546	36

Leakages were collected manually.

Total External Leakage Collected Over 5 Minute Duration:	0.0	mls
Average Leak Rate Over 5 Minute Duration:	0.0	ml/min
Allowable Leak Rate:	200	ml/min

Was the Valve Leakage Below the Allowable?	**Yes**